Modular 90° Wraparound Shower Rail | Right Hand

Model RBA4110-754

Materials & Features

Stainless steel 90° wraparound shower rail is suitable for installations where a free-standing shower chair is selected. The snap flange covers conceal the fixings. This kit offers flexibility to suit site requirements at time of installation. Consult installation instructions for detail.

Technical Detail

Rail:	32mm [Dia], 304 Satin Stainless Steel
Fixings:	By others

Available Model

RBA4110-754	Modular 90° Wraparound Shower Rail, Right Hand

Related Products

RBA4110-753	Modular 90° Wraparound Shower Rail, Left Hand
RBA4110-942	Handset, Hose, Slider & Mixer Kit
RBA4171-101	Shower Curtain Rail + 2 Curtains & Hooks

Installation

Warning: Grab rails are no stronger than the anchors or walls to which they are attached and must be firmly secured in order to support the loads for which they are intended. Refer to local codes and installation instructions for location for fixing points, method of attachment, etc.

Important: Installation instructions and current rough-in details should be furnished with each fixture. Do not rough in without certified dimensions. Dimensions are subject to manufacturer's tolerance of +/-10mm.

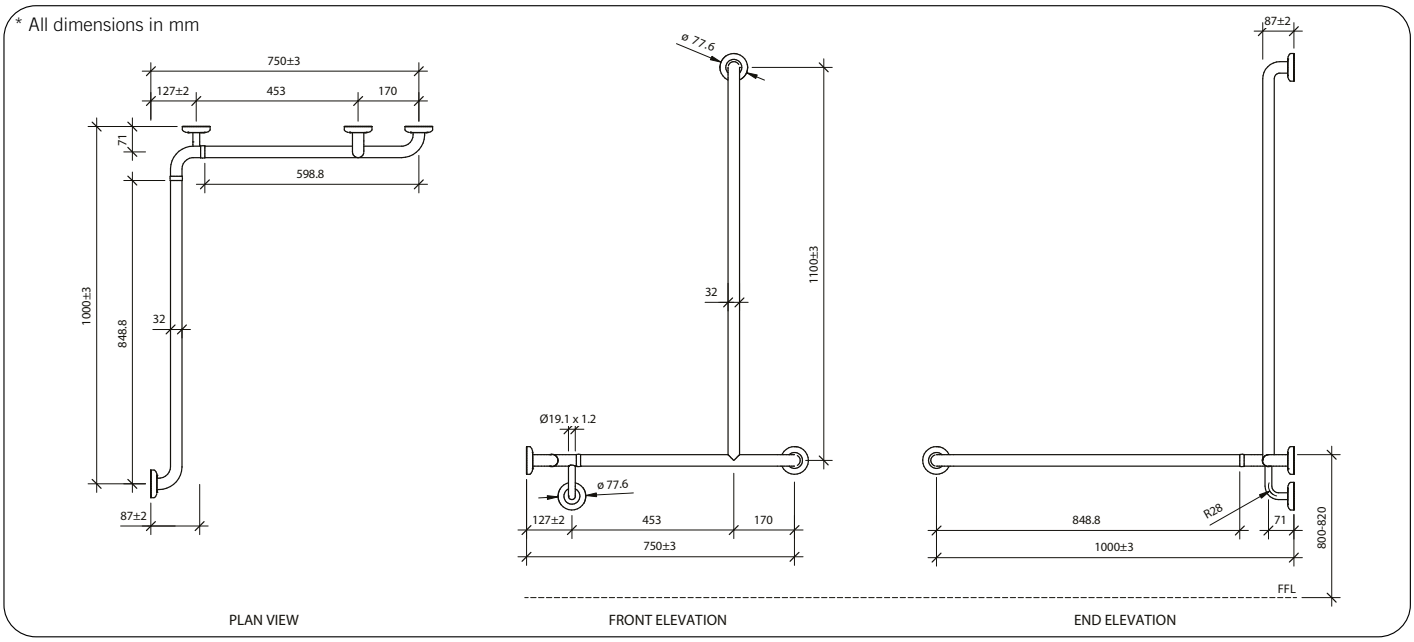

As improvements in the design and performance of RBA products are continuous, specifications may be subject to change without notice.
The illustrations and descriptions herein are applicable to production as of the date of this Technical Data Sheet. Revised 11/22 © 2022 by RBA Group TD/Model RBA4110-754/1122

SYDNEY | MELBOURNE | BRISBANE | PERTH | AUCKLAND
Australia 1300 788 778 www.rba.com.au | **New Zealand** 0800 722 111 www.rbagroup.co.nz